Bathroom Option B

For more information please contact:

Technical Services Europe
Hilton International
Maple Court
Reeds Crescent
Watford WD24 4QQ
United Kingdom

Tel: +44 207 856 8154
Fax: +44 1923 202050

HILTON GARDEN - INN

BATHROOM OPTION B

F.F.E SUMMARY SCHEDULE

	Bathroom				
Cntrl No	Item	Supplier	Contact Name	Tele Number	Email Address
INT-BTH-B-01	Floor tiles	Porcelanosa	Ian Hughes	+44 (0) 870 8110300	ian.hughes@procelanosa.co.uk
INT-BTH-B-02	Curved shower rail	Ach & Angles	Teddy Marcus	+01 917 705 9722	teddy@arcsandangles.com
INT-BTH-B-02A	Shower Curtain	Ach & Angles	Teddy Marcus	+01 917 705 9723	teddy@arcsandangles.com
INT-BTH-B-03	Wall tiles	Porcelanosa	Ian Hughes	+44 (0) 870 8110300	ian.hughes@procelanosa.co.uk
INT-BTH-B-04	Wall border tile	Porcelanosa	Ian Hughes	+44 (0) 870 8110300	ian.hughes@procelanosa.co.uk
INT-BTH-B-05	Vanity unit	Domas Tiles	Richard Bull	+44 (0) 208 4819500	richard.bull@domustiles.com
INT-BTH-B-06	Vanity unit facia	Main Contractor	Main Contractor	Main Contractor	Main Contractor
INT-BTH-B-07	Mirror over vanity	Matz Design	Reg Lacey	+44 (0)1691 656811	RLacey7680@aol.com
INT-BTH-B-08	Demista pad	Matz Design	Reg Lacey	+44 (0)1691 656811	RLacey7680@aol.com
INT-BTH-B-09	Basin	DURVIT	Toni Mitchell	+44 (0) 870 7307787	toni.mitchell@uk.duravit.com
INT-BTH-B-10	Basin mixer tap	Wolseley	Sean Collins	+44 (0) 1926 705660	sean.collins@wolesley.co.uk
INT-BTH-B-11	Bath/Shower arrangement	Wolseley	Sean Collins	+44 (0) 1926 705660	sean.collins@wolesley.co.uk
INT-BTH-B-12	Bath	Wolseley	Sean Collins	+44 (0) 1926 705660	sean.collins@wolesley.co.uk
INT-BTH-B-13	WC	Wolseley	Sean Collins	+44 (0) 1926 705660	sean.collins@wolesley.co.uk
INT-BTH-B-14	Toilet roll holder	Waterbury	John Armstrong	+44 (0) 121 3336062	jonh.armstrong@waterburys.co.uk
INT-BTH-B-15	Spare toilet roll holder	Waterbury	John Armstrong	+44 (0) 121 3336062	jonh.armstrong@waterburys.co.uk
INT-BTH-B-16	Facia panel mounted towel pigeon holes	Main Contractor	Main Contractor	Main Contractor	Main Contractor
INT-BTH-B-17	Drying rack	Waterbury	John Armstrong	+44 (0) 121 3336062	jonh.armstrong@waterburys.co.uk
INT-BTH-B-18	Single robe hook	Waterbury	John Armstrong	+44 (0) 121 3336062	jonh.armstrong@waterburys.co.uk
INT-BTH-B-19	Door stop	Waterbury	John Armstrong	+44 (0) 121 3336062	jonh.armstrong@waterburys.co.uk
INT-BTH-B-20	Wastebasket	Waterbury	John Armstrong	+44 (0) 121 3336062	jonh.armstrong@waterburys.co.uk
INT-BTH-B-21	Toilet brush & holder	Waterbury	John Armstrong	+44 (0) 121 3336062	jonh.armstrong@waterburys.co.uk
INT-BTH-B-22	Grab handle & soap tray	Waterbury	John Armstrong	+44 (0) 121 3336062	jonh.armstrong@waterburys.co.uk
INT-BTH-B-23	Tissue box holder	Aslotel	Martin Brown	+44 (0) 1372 362533	martin.brown@aslotel.co.uk
INT-BTH-B-24	Artwork	Indigo Art Ltd	Glen Hughes	+44 (0) 151 9339779	glen.hughes@indigoart.co.uk

Alternative products/suppliers may not be
applicable to this product due to copyright.
Any alternatives should be approved by Hilton

SPECIFICATION CONTROL SHEET - BATHROOM OPTION B

PROJECT	: HILTON GARDEN INN	CONTROL No	: **BTH-B-01**
PROJECT NO	:	DRAWING REF	:
DATE	: Oct-07	ITEM	: FLOOR TILE
		AREA	: OPTION B

DESCRIPTION : **Slate effect ceramic floor tile**

CODE : V5160302
COLOUR : Block Carpatia Negro
SIZE : 16.4 x 66 cm

COMMENTS :

SUPPLIER

NAME : PORCELANOSA
ADDRESS : Otterspool Way, Watford, Hertfordshire, WD25 8HL, UK
TELEPHONE : +44 (0) 870 8110 300
FACSIMILE : +44 (0) 870 8110 580
CONTACT : Ian Hughes
EMAIL : ian.hughes@procelanosa.co.uk

QUANTITY
CURRENCY
COST PER M²
COST PER LINEAR M
TOTAL COST

Alternative products/suppliers may not be applicable to this product due to copyright. Any alternatives should be approved by Hilton

Hilton Garden Inn

SPECIFICATION CONTROL SHEET - BATHROOM OPTION B

PROJECT	:	HILTON GARDEN INN	CONTROL No	:	**BTH-B-02**
PROJECT NO	:		DRAWING REF	:	
DATE	:	Oct-07	ITEM	:	CURVED SHOWER RAIL
			AREA	:	OPTION B

DESCRIPTION : **Curved shower rail**

:

SIZE : 1800mm or 1700mm (dependant on bath size) Curved shower rod to HGI standard

COMMENTS :

SUPPLIER

NAME	:	Arc & Angles
ADDRESS	:	174 Hudson Street, New York, NY 10013, 212-625-6616
TELEPHONE		917-705-9722
FACSIMILE	:	212-625-6611
CONTACT	:	Teddy Marcus
EMAIL	:	teddy@arcsandangles.com
	:	

QUANTITY
CURRENCY
COST PER M²
COST PER LINEAR M
TOTAL COST

Alternative products/suppliers may not be applicable to this product due to copyright. Any alternatives should be approved by Hilton

Hilton Garden Inn

SPECIFICATION CONTROL SHEET - BATHROOM OPTION B

PROJECT	:	HILTON GARDEN INN	CONTROL No	:	**BTH-B-2A**
PROJECT NO	:		DRAWING REF	:	
DATE	:	Oct-07	ITEM	:	SHOWER CURTAIN
			AREA	:	OPTION B

DESCRIPTION : **Shower curtain**
HGI Standard

:
SIZE : To fit the bath size

COMMENTS :

SUPPLIER

NAME	:	Arc & Angles
ADDRESS	:	174 Hudson Street, New York, NY 10013, 212-625-6616
TELEPHONE		917-705-9722
FACSIMILE	:	212-625-6611
CONTACT	:	Teddy Marcus
EMAIL	:	teddy@arcsandangles.com
	:	

QUANTITY
CURRENCY
COST PER M²
COST PER LINEAR M
TOTAL COST

Alternative products/suppliers may not be applicable to this product due to copyright. Any alternatives should be approved by Hilton

Hilton Garden Inn

SPECIFICATION CONTROL SHEET - BATHROOM OPTION B

PROJECT	:	HILTON GARDEN INN	CONTROL No	:	**BTH-B-03**
PROJECT NO	:		DRAWING REF	:	
DATE	:	Oct-07	ITEM	:	WALL TILE
			AREA	:	OPTION B

DESCRIPTION : **Ceramic wall tiles**

CODE : P3410430
COLOUR : Oxon White
SIZE : 20 x 31.6 mm

COMMENTS :

SUPPLIER

NAME : PORCELANOSA
ADDRESS : Otterspool Way, Watford, Hertfordshire, WD25 8HL, UK
TELEPHONE : +44 (0) 870 8110 300
FACSIMILE : +44 (0) 870 8110 580
CONTACT : Ian Hughes
EMAIL : ian.hughes@procelanosa.co.uk

QUANTITY
CURRENCY
COST PER M²
COST PER LINEAR M
TOTAL COST

Alternative products/suppliers may not be applicable to this product due to copyright. Any alternatives should be approved by Hilton

Hilton Garden Inn

SPECIFICATION CONTROL SHEET - BATHROOM OPTION B

PROJECT	: HILTON GARDEN INN	CONTROL No	: **BTH-B-04**
PROJECT NO	:	DRAWING REF	:
DATE	: Oct-07	ITEM	: WALL BORDER TILE
		AREA	: OPTION B

DESCRIPTION : **High level border tile**

CODE : V5081302
COLOUR : Block Carpatia Negro
SIZE : 8.1 x 66.6 cm

COMMENTS : Same spec as the floor tiles

SUPPLIER

NAME : PORCELANOSA
ADDRESS : Otterspool Way, Watford, Hertfordshire, WD25 8HL, UK
TELEPHONE : +44 (0) 870 8110 300
FACSIMILE : +44 (0) 870 8110 580
CONTACT : Ian Hughes
EMAIL : Ian.hughes@procelanosa.co.uk

QUANTITY
CURRENCY
COST PER M²
COST PER LINEAR M
TOTAL COST

Alternative products/suppliers may not be applicable to this product due to copyright. Any alternatives should be approved by Hilton

Hilton Garden Inn

SPECIFICATION CONTROL SHEET - BATHROOM OPTION B

PROJECT	: HILTON GARDEN INN	CONTROL No	: **BTH-B-05**
PROJECT NO	:	DRAWING REF	:
DATE	: Oct-07	ITEM	: VANITY UNIT TOP
		AREA	: OPTION B

DESCRIPTION : **Quarza silicastone vanity unit top**

CODE : DTS QS 102 Honed and sealed

COMMENTS : Purchased via main contractor

SUPPLIER

NAME : DOMUS TILES
ADDRESS : 3 Molesey Business Centre, Central Avenue, West Molesey, Surrey, KT8 2QZ, UK
TELEPHONE : +44 (0) 20 8481 9500
FACSIMILE : +44 (0) 20 8481 9501
CONTACT : Richard Bull
EMAIL : richard.bull@domustiles.com

QUANTITY
CURRENCY
COST PER M²
COST PER LINEAR M
TOTAL COST

Alternative products/suppliers may not be applicable to this product due to copyright. Any alternatives should be approved by Hilton

Hilton Garden Inn

SPECIFICATION CONTROL SHEET - BATHROOM OPTION B

PROJECT	: HILTON GARDEN INN	CONTROL No	: **BTH-B-06**
PROJECT NO	:	DRAWING REF	:
DATE	: Oct-07	ITEM	: VANITY UNIT FACIA
		AREA	: OPTION B

DESCRIPTION : **Timber effect laminate facia panel**
American Walnut to match casegoods and doors

CODE :

COMMENTS :

SUPPLIER

NAME : MAIN CONTRACTORS ITEM
ADDRESS :
TELEPHONE :
FACSIMILE :
CONTACT :
EMAIL :

QUANTITY
CURRENCY
COST PER M²
COST PER LINEAR M
TOTAL COST

Alternative products/suppliers may not be applicable to this product due to copyright. Any alternatives should be approved by Hilton

Hilton Garden Inn

SPECIFICATION CONTROL SHEET - BATHROOM OPTION B

PROJECT	: HILTON GARDEN INN	CONTROL No	: **BTH-B-07**
PROJECT NO	:	DRAWING REF	:
DATE	: Oct-07	ITEM	: MIRROR OVER VANITY
		AREA	: OPTION B

DESCRIPTION : **Back lit wall mirror with rear demista pad**

CODE : MZ/IM/G/1MS

COMMENTS : ref to drawings for size
Ref HG-DR-B6 is purchesed with this product,

SUPPLIER

NAME	: Matz Design Ltd
ADDRESS	: Inglewood Office, Ellesmere Rd, Whittington, Oswestry, Shropshire SY11 4DJ
TELEPHONE	: +44 (0)1691 656811
FACSIMILE	: +44 (0) 8452 805959
CONTACT	: Reg Lacey
EMAIL	: RLacey7680@aol.com

QUANTITY
CURRENCY
COST PER M²
COST PER LINEAR M
TOTAL COST

Alternative products/suppliers may not be applicable to this product due to copyright. Any alternatives should be approved by Hilton

Hilton Garden Inn

SPECIFICATION CONTROL SHEET - BATHROOM OPTION B

PROJECT	: HILTON GARDEN INN	CONTROL No	: **BTH-B-08**
PROJECT NO	:	DRAWING REF	:
DATE	: Oct-07	ITEM	: DEMISTA PAD
		AREA	: OPTION B

DESCRIPTION : **Demista pad for wall mirror**

CODE : 524x524mm size

COMMENTS : To be purchased with main mirror - control sheet HG-DR-B6

SUPPLIER

NAME : Matz Design Ltd
ADDRESS : Inglewood Office, Ellesmere Rd, Whittington, Oswestry, Shropshire SY11 4DJ
TELEPHONE : +44 (0)1691 656811
FACSIMILE : +44 (0) 8452 805959
CONTACT : Reg Lacey
EMAIL : RLacey7680@aol.com

QUANTITY
CURRENCY
COST PER M²
COST PER LINEAR M
TOTAL COST

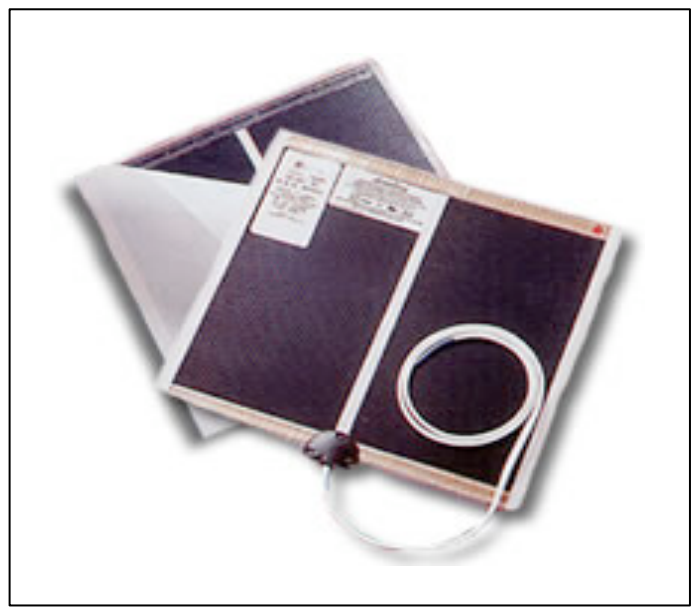

Alternative products/suppliers may not be applicable to this product due to copyright. Any alternatives should be approved by Hilton

Hilton Garden Inn

SPECIFICATION CONTROL SHEET - BATHROOM OPTION B

PROJECT	: HILTON GARDEN INN	CONTROL No	: **BTH-B-09**
PROJECT NO	:	DRAWING REF	:
DATE	: Oct-07	ITEM	: BASIN
		AREA	: OPTION B

DESCRIPTION : **Surface mounted round basin washbowl**

CODE : 32542
SIZE : 420 mm
COLOUR : Bacino

COMMENTS :

SUPPLIER

NAME : DURAVIT
ADDRESS : P.O.Box 240, 78128 Hornberg, Germany
TELEPHONE : +44 (0) 870 730787
FACSIMILE : +49 7833 70 289
CONTACT : Toni Mitchell
EMAIL : www.duravit.com

QUANTITY
CURRENCY
COST PER M²
COST PER LINEAR M
TOTAL COST

Alternative products/suppliers may not be applicable to this product due to copyright. Any alternatives should be approved by Hilton

Hilton Garden Inn

SPECIFICATION CONTROL SHEET - BATHROOM OPTION B

PROJECT	: HILTON GARDEN INN	CONTROL No	: **BTH-B-10**
PROJECT NO	:	DRAWING REF	:
DATE	: Oct-07	ITEM	: BASIN MIXER TAP
		AREA	: OPTION B

DESCRIPTION : **Basin mixer pillar tap**

CODE : 3225000 - Grohe Lineare High Bowl Basin Mixer

FINISH : Polished chrome finish

COMMENTS : See separate attached Grohe specification sheet

SUPPLIER

NAME : WOLSELEY
ADDRESS : Wolseley UK * The Wolseley Center, Harrison Way, Spa Park, Leamington Spa, CV31 3HH, UK
TELEPHONE : +44 (0)1926 705660
FACSIMILE : +44 (0) 870 901 6675
CONTACT : Sean Collins
EMAIL : sean.collins@wolesley.co.uk

QUANTITY
CURRENCY
COST PER M²
COST PER LINEAR M
TOTAL COST

Alternative products/suppliers may not be applicable to this product due to copyright. Any alternatives should be approved by Hilton

Hilton Garden Inn

SPECIFICATION CONTROL SHEET - BATHROOM OPTION

Manufacturer:

Grohe Limited
Blays House
Wick Road
Englefield Green
TW20 0HJ Egham, Surrey
United Kingdom
Phone: +44 (0)871 / 200 3414
Fax: +44 (0)871 / 200 3415
Internet http://www.grohe.co.uk
Contact: Murrad Sher
Mobile: +44 7714 151 048
Email: murrad.sher@grohe.co.uk

Supplier:

Picture/Sample:

Technical Details:

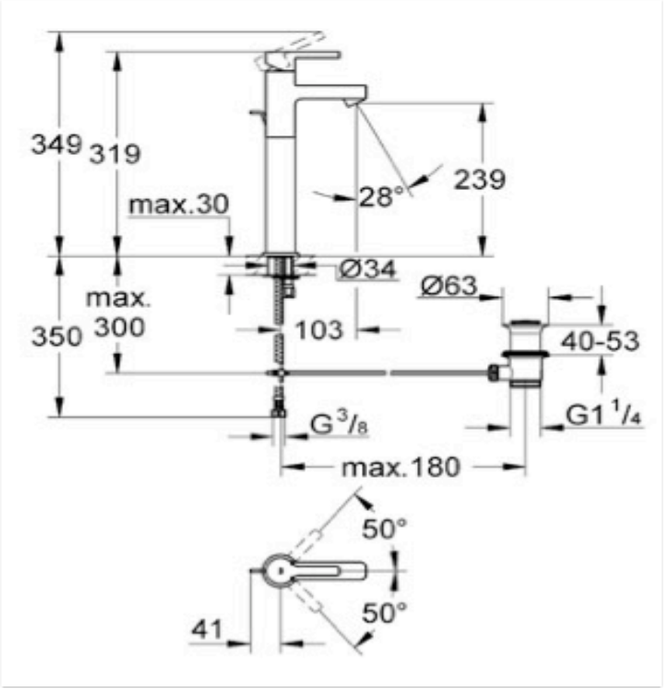

SPECIFICATION:
Tall Basin Mixer

UNIT: Lineare Tall Basin Mixer

REFERENCE: **3225000**

Colour: Chrome

Unit Cost:

Notes:

Lineare
Basin mixer 1/2"
for free-standing basins
Monobloc installation
28 mm ceramic cartridge
with **GROHE SilkMove®**
mousseur aerator (HP)
pop-up waste set 1 1/4"
flexible connection hoses
rapid installation system
Min. recommended pressure 1.0 bar
Balanced hot and cold supplies
Available: February 2007

SPECIFICATION CONTROL SHEET - BATHROOM OPTION B

PROJECT	: HILTON GARDEN INN	CONTROL No	: **BTH-B-11**
PROJECT NO	:	DRAWING REF	:
DATE	: Oct-07	ITEM	: BATH/SHOWER ARRANGEMENT
		AREA	: OPTION B

DESCRIPTION : **Bath and shower arrangement**

CODE :

Wolseley	Grohe	
J49250	19242000	Grohe 2000 Concealed Therm Shower Mixer
J49122	34212000	Concealed Body for 19240
J44171	28797000	Grohe Relexa Shower Rail 600 mm
J44556	28151000	Grohe relexa Shower Hose 1500mm
J76873	28419000	Tempesta Duo
28678000	28678000	Relexa Plus Wall Shower Union
13614000	13614000	Sentosa Grohe Bath Spout
28885000	28885000	Retaining Clip

COMMENTS : See separate attached Grohe specification sheet

SUPPLIER

NAME : WOLSELEY
ADDRESS : Wolseley UK * The Wolseley Center, Harrison Way, Spa Park, Leamington Spa, CV31 3HH, UK
TELEPHONE : +44 (0)1926 705660
FACSIMILE : +44 (0) 870 901 6675
CONTACT : Sean Collins
EMAIL : sean.collins@wolesley.co.uk

QUANTITY
CURRENCY
COST PER M²
COST PER LINEAR M
TOTAL COST

Alternative products/suppliers may not be applicable to this product due to copyright. Any alternatives should be approved by Hilton

Hilton Garden Inn

SPECIFICATION CONTROL SHEET - BATHROOM OPTIO

Manufacturer:

Grohe Limited
Blays House
Wick Road
Englefield Green
TW20 0HJ Egham, Surrey
United Kingdom
Phone: +44 (0)871 / 200 3414
Fax: +44 (0)871 / 200 3415
Internet http://www.grohe.co.uk
Contact: Murrad Sher
Mobile: +44 7714 151 048
Email: murrad.sher@grohe.co.uk

Supplier:

SPECIFICATION:
Shower Head

UNIT: Tempesta Duo ½"

REFERENCE: 28419000

Colour: Chrome

Unit Cost:

Notes:

Tempesta
Handshower Duo, 1/2"

Adjustable shower jet
Needle Jet / Rain
SpeedClean anti-limescale system
8 l/min. flow limiter
Min. recommended pressure 1.0 bar

Picture/Sample:

Technical Details:

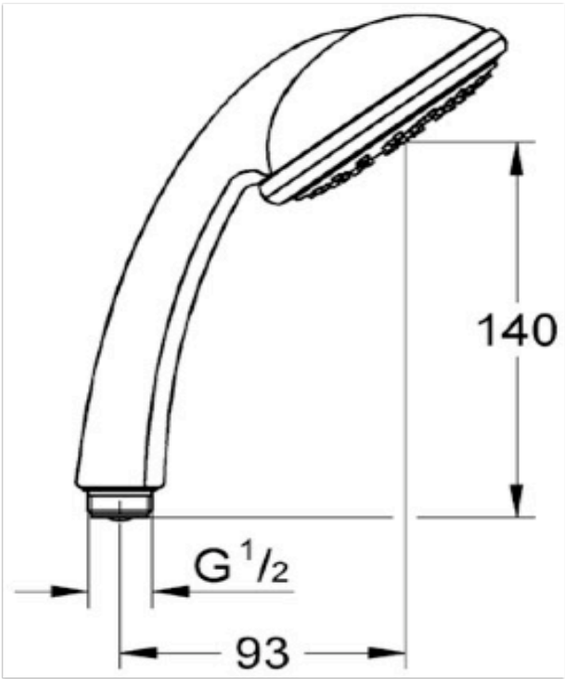

SPECIFICATION CONTROL SHEET - BATHROOM OPTIO

Manufacturer:

Grohe Limited
Blays House
Wick Road
Englefield Green
TW20 0HJ Egham, Surrey
United Kingdom
Phone: +44 (0)871 / 200 3414
Fax: +44 (0)871 / 200 3415
Internet http://www.grohe.co.uk
Contact: Murrad Sher
Mobile: +44 7714 151 048
Email: murrad.sher@grohe.co.uk

Supplier:

SPECIFICATION:
Metal Shower Rail

UNIT: Relexa Shower Rail 600

REFERENCE: 28797000

Colour: Chrome

Unit Cost:

Notes:

Relexa
Shower rail, 600 mm

Glide element and swivel holder
Suitable for
Corner mounting
Adjustable distance between wall
Brackets to adapt to existing drill holes

Picture/Sample/ Technical Details:

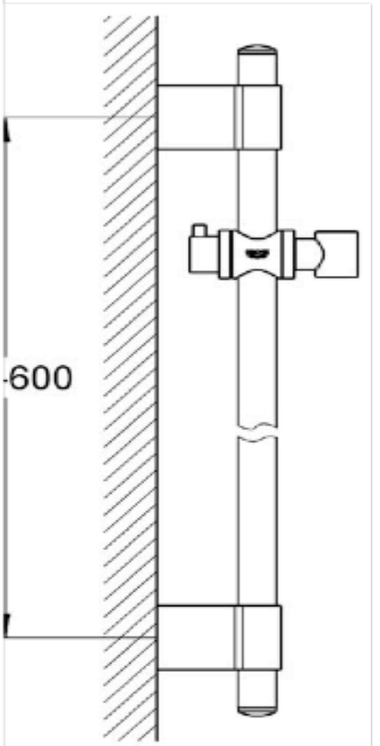

SPECIFICATION CONTROL SHEET - BATHROOM OPTIO

Manufacturer:

Grohe Limited
Blays House
Wick Road
Englefield Green
TW20 0HJ Egham, Surrey
United Kingdom
Phone: +44 (0)871 / 200 3414
Fax: +44 (0)871 / 200 3415
Internet http://www.grohe.co.uk
Contact: Murrad Sher
Mobile: +44 7714 151 048
Email: murrad.sher@grohe.co.uk

Supplier:

Picture/Sample:

Technical Details:

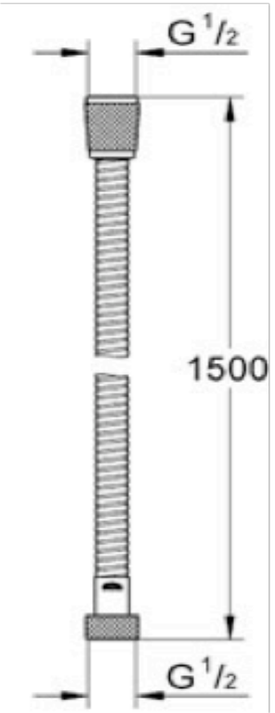

SPECIFICATION: Shower Hose 1500mm	
UNIT:	
REFERENCE:	**28151000**
Colour: Chrome	
Unit Cost:	
Notes:	

Relexa
Relexaflex hose

1500 mm
1/2" x 1/2"

SPECIFICATION CONTROL SHEET - BATHROOM OPTIO

Manufacturer:

Grohe Limited
Blays House
Wick Road
Englefield Green
TW20 0HJ Egham, Surrey
United Kingdom
Phone: +44 (0)871 / 200 3414
Fax: +44 (0)871 / 200 3415
Internet http://www.grohe.co.uk
Contact: Murrad Sher
Mobile: +44 7714 151 048
Email: murrad.sher@grohe.co.uk

Supplier:

Picture/Sample:

Technical Details:

SPECIFICATION:
Retaining Clip

UNIT: Retaining Clip

REFERENCE: 28885000

Colour: Silver

Unit Cost:

Notes:

Grohe Retaining Clip
Suitable For Relexa Rail

SPECIFICATION CONTROL SHEET - BATHROOM OPTIO

Manufacturer:

Grohe Limited
Blays House
Wick Road
Englefield Green
TW20 0HJ Egham, Surrey
United Kingdom
Phone: +44 (0)871 / 200 3414
Fax: +44 (0)871 / 200 3415
Internet http://www.grohe.co.uk
Contact: Murrad Sher
Mobile: +44 7714 151 048
Email: murrad.sher@grohe.co.uk

Supplier:

Picture/Sample:

Technical Details:

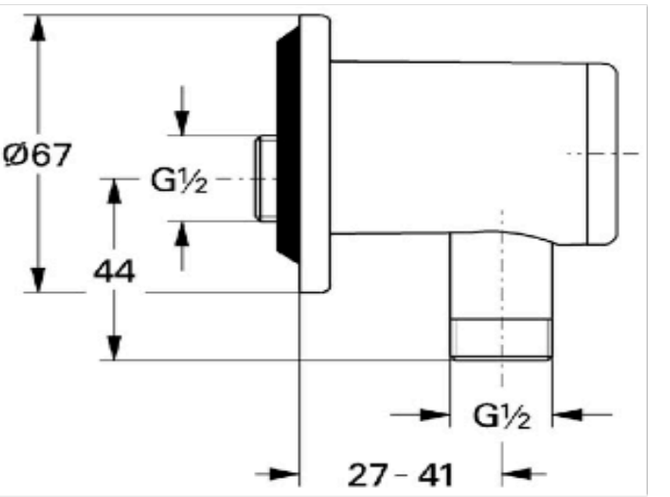

SPECIFICATION: Shower Outlet Elbow	
UNIT: Relexa Plus Wall Union	
REFERENCE:	**28678000**
Colour: Chrome	
Unit Cost	

Notes:

Relexa plus
Wall union 1/2"

1/2"elbow union
protected against backflow

SPECIFICATION CONTROL SHEET - BATHROOM OPTIO

Manufacturer:

Grohe Limited
Blays House
Wick Road
Englefield Green
TW20 0HJ Egham, Surrey
United Kingdom
Phone: +44 (0)871 / 200 3414
Fax: +44 (0)871 / 200 3415
Internet http://www.grohe.co.uk
Contact: Murrad Sher
Mobile: +44 7714 151 048
Email: murrad.sher@grohe.co.uk

Supplier:

Picture/Sample:

SPECIFICATION:
Concealed Bath/Shower Mixer

UNIT: G2000 Bath/Shower Mxr

REFERENCE: 19242000

Colour: Chrome

Unit Cost:

Notes:

Grohtherm 2000
Thermostatic bath/shower mixer trim

Set for final installation for34 212
without concealed body
metal rosette, covered coupling
escutcheon- and shaft-sealing
temperature scale handle with
GROHE SafeStop safety stop at 38C
Aquadimmer handle with multiple function
- flow control
- diverter: bath/shower

Technical Details:

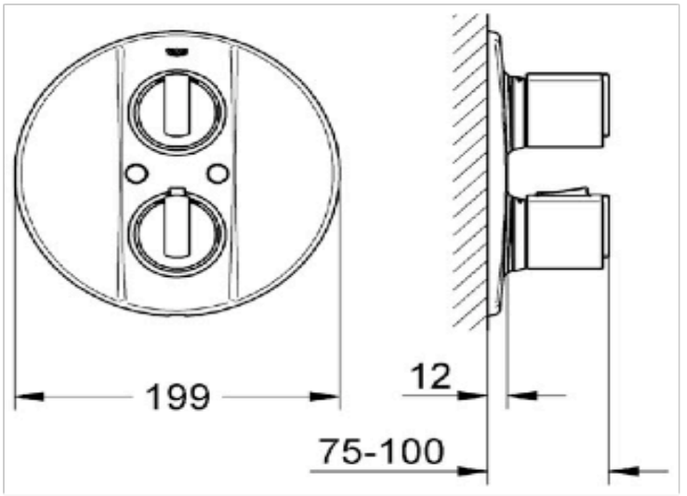

SPECIFICATION CONTROL SHEET - BATHROOM OPTIO

Manufacturer:

Grohe Limited
Blays House
Wick Road
Englefield Green
TW20 0HJ Egham, Surrey
United Kingdom
Phone: +44 (0)871 / 200 3414
Fax: +44 (0)871 / 200 3415
Internet http://www.grohe.co.uk
Contact: Murrad Sher
Mobile: +44 7714 151 048
Email: murrad.sher@grohe.co.uk

Supplier:

Picture/Sample:

Technical Details:

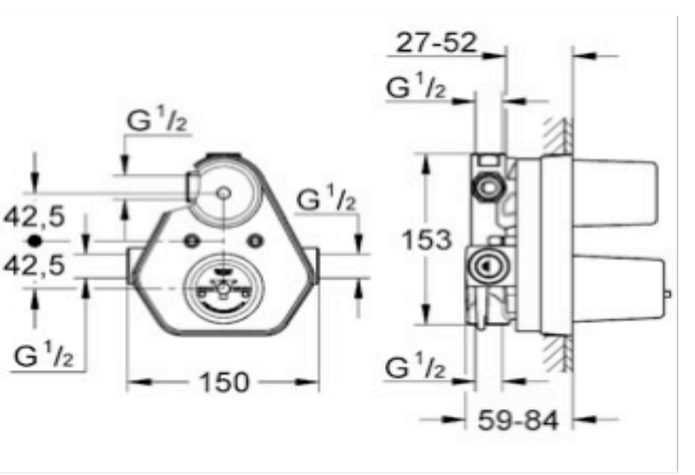

SPECIFICATION:
Concealed Shower Valve Part

UNIT: Concealed Part Therm Sh.

REFERENCE: 34212000

Colour: Chrome

Unit Cost:

Note: **Thermostatic bath/shower mixer 1/2"** concealed body without finishing trim set **GROHE TurboStat** compact cartridge with wax thermoelement
Aquadimmer with multiple function
top outlet 1/2" (shower)
outlet left 1/2" (to bath spout)
bottom outlet 1/2" - can only be used with separate stopvalve built-in non return valve and dirt strainers dirt strainers
fastening loops
Min. recommended pressure 1.0 bar
Max. pressure differential 5:1

SPECIFICATION CONTROL SHEET - BATHROOM OPTIO

Manufacturer:

Grohe Limited
Blays House
Wick Road
Englefield Green
TW20 0HJ Egham, Surrey
United Kingdom
Phone: +44 (0)871 / 200 3414
Fax: +44 (0)871 / 200 3415
Internet http://www.grohe.co.uk
Contact: Murrad Sher
Mobile: +44 7714 151 048
Email: murrad.sher@grohe.co.uk

Supplier:

Picture/Sample:

Technical Details:

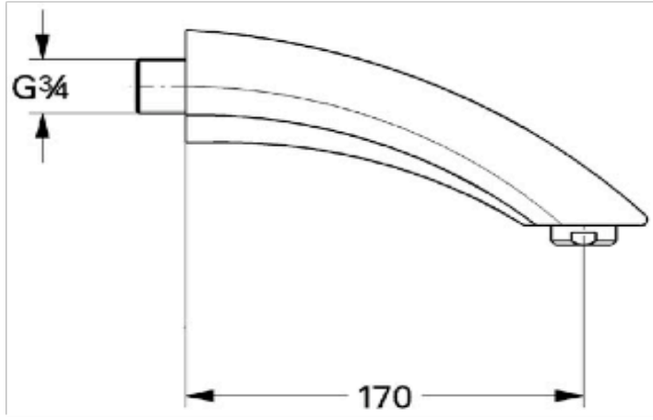

SPECIFICATION: Bath Spout	
UNIT: Sentosa Bath Spout	
REFERENCE:	**13614000**
Colour: Chrome	
Unit Cost:	
Notes:	

Bath spout 3/4"

wall mounted
mousseur aerator (HP)
projection 170 mm

SPECIFICATION CONTROL SHEET - BATHROOM OPTION B

PROJECT	: HILTON GARDEN INN	CONTROL No	: **BTH-B-12**
PROJECT NO	:	DRAWING REF	:
DATE	: Oct-07	ITEM	: BATH
		AREA	: OPTION B

DESCRIPTION : **Bath - steel with white enameled finish**

CODE : Kaldewei
SIZE : 1600 x750 (3.5mm thick)

COMMENTS : No tap hole, no grips with slip resistant finish 373-1
Pop up & Waste to be included

SUPPLIER

NAME : WOLSELEY
ADDRESS : Wolseley UK * The Wolseley Center, Harrison Way, Spa Park, Leamington Spa, CV31 3HH, UK
TELEPHONE : +44 (0)1926 705660
FACSIMILE : +44 (0) 870 901 6675
CONTACT : Sean Collins
EMAIL : sean.collins@wolesley.co.uk

QUANTITY
CURRENCY
COST PER M²
COST PER LINEAR M
TOTAL COST

Alternative products/suppliers may not be applicable to this product due to copyright. Any alternatives should be approved by Hilton

Hilton Garden Inn

SPECIFICATION CONTROL SHEET - BATHROOM OPTION B

PROJECT	: HILTON GARDEN INN	CONTROL No	: **BTH-B-13**
PROJECT NO	:	DRAWING REF	:
DATE	: Oct-07	ITEM	: WC
		AREA	: OPTION B

DESCRIPTION : **Wall mounted porcelain wc**

CODE :

Wolseley	Grohe	
B03815		Ideal Standard white wall mounted wc pan white
B84080		Ideal Standard white wc seat and cover white
J44451	38526000	Grohe SL 820mm Frame
J44452	3855800M	Wall Brackets
J44453	38506000	Grohe Dual Flush Plate CP

COMMENTS :

SUPPLIER

NAME : WOLSELEY
ADDRESS : Wolseley UK * The Wolseley Center, Harrison Way, Spa Park, Leamington Spa, CV31 3HH, UK
TELEPHONE : +44 (0)1926 705660
FACSIMILE : +44 (0) 870 901 6675
CONTACT : Sean Collins
EMAIL : sean.collins@wolesley.co.uk

QUANTITY
CURRENCY
COST PER M²
COST PER LINEAR M
TOTAL COST

Alternative products/suppliers may not be applicable to this product due to copyright. Any alternatives should be approved by Hilton

Hilton Garden Inn

SPECIFICATION CONTROL SHEET - BATHROOM OPTION

Manufacturer:

Grohe Limited
Blays House
Wick Road
Englefield Green
TW20 0HJ Egham, Surrey
United Kingdom
Phone: +44 (0)871 / 200 3414
Fax: +44 (0)871 / 200 3415
Internet http://www.grohe.co.uk
Contact: Murrad Sher
Mobile: +44 7714 151 048
Email: murrad.sher@grohe.co.uk

Supplier:

Picture/Sample:

Technical Details:

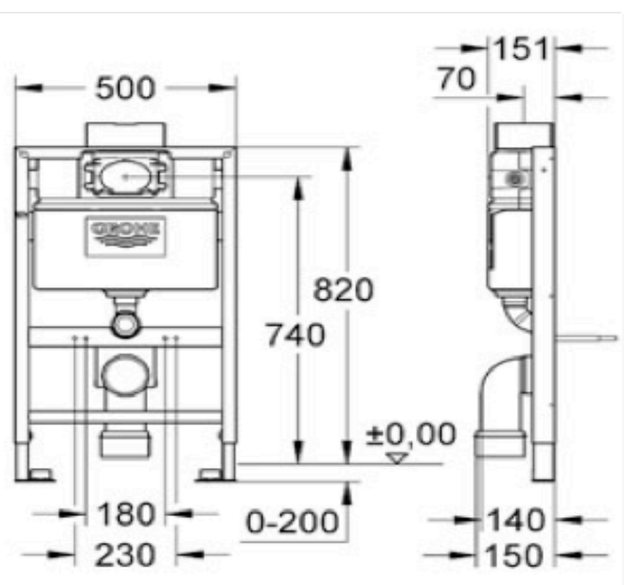

SPECIFICATION:
WC Framing System

UNIT: Rapid SL 0.82m Frame

REFERENCE: 38526000

Colour: Blue

Unit Cost:

Notes:
Rapid SL WC 0.82 m
Dual or single flush
0.82 m installation height
Front or top actuation
For on-the-wall installations or studded walls.
Powder coated steel frame, self-supporting
For dry-cladding, completely
Pre-assembled with fixed connections for
single or series installation fixing material
2 WC fixing bolts distance of fixing bolts
180/230 mm PP-outlet bend 80/100 mm dia.
inlet and outlet connecting set dual flush
discharge valve pneumatic connection from left
/ right or back insulated against condensation
with angle stop valve 1/2" and flush pipe
without front wall brackets 38 558 00M (pair)

SPECIFICATION CONTROL SHEET - BATHROOM OPTION

Manufacturer:

Grohe Limited
Blays House
Wick Road
Englefield Green
TW20 0HJ Egham, Surrey
United Kingdom
Phone: +44 (0)871 / 200 3414
Fax: +44 (0)871 / 200 3415
Internet http://www.grohe.co.uk
Contact: Murrad Sher
Mobile: +44 7714 151 048
Email: murrad.sher@grohe.co.uk

Supplier:

Picture/Sample:

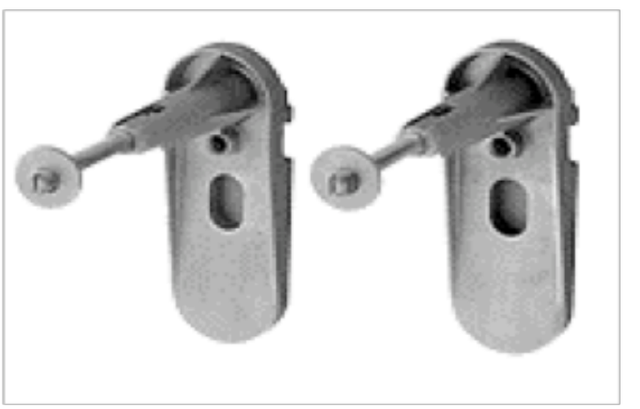

Technical Details:

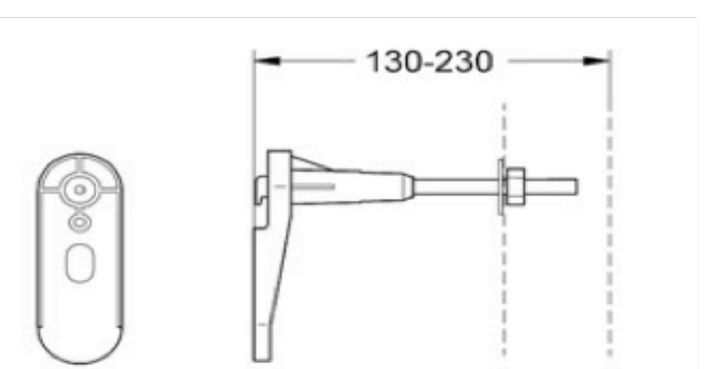

SPECIFICATION:
Frame Brackets

UNIT: Rapid Front Wall Brackets

REFERENCE: 3855800M

Colour:

Unit Cost:

Notes:

Rapid SL Front wall brackets

for against-the-wall installations
for fixing the elements at the brick-wall or in front of the studded wall
steady vertical adjustment from 130 - 230 mm
fixing material
2 pieces

SPECIFICATION CONTROL SHEET - BATHROOM OPTION

Manufacturer:

Grohe Limited
Blays House
Wick Road
Englefield Green
TW20 0HJ Egham, Surrey
United Kingdom
Phone: +44 (0)871 / 200 3414
Fax: +44 (0)871 / 200 3415
Internet http://www.grohe.co.uk
Contact: Murrad Sher
Mobile: +44 7714 151 048
Email: murrad.sher@grohe.co.uk

Supplier:

Picture/Sample:

Technical Details:

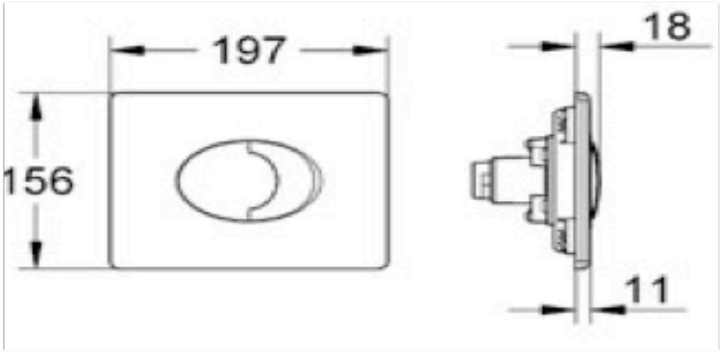

SPECIFICATION: WC Flush Plate	
UNIT: Dual Flush Front Plate	
REFERENCE:	**38506000**
Colour: Chrome	
Unit Cost:	
Notes:	

Skate Air
WC Wall plate

for horizontal installation
156 x 197 mm
for pneumatic drop valve
made of ABS

SPECIFICATION CONTROL SHEET - BATHROOM OPTION B

PROJECT	: HILTON GARDEN INN	CONTROL No	: **BTH-B-14**
PROJECT NO	:	DRAWING REF	:
DATE	: Oct-07	ITEM	: TOILET ROLL HOLDER
		AREA	: OPTION B

DESCRIPTION : **Wall mounted toilet roll holder**

CODE : NB 43 Hotel covered toilet roll holder
FINISH : Polished stainless steel

COMMENTS :

SUPPLIER

NAME : WATERBURY
ADDRESS : 60 Adams Street, Nechells, Birmingham, B7 4LT, UK
TELEPHONE : +44 (0) 121 333 6062
FACSIMILE : +44 (0) 121 333 6459
CONTACT : John Armstrong
EMAIL : jonh.armstrong@waterburys.co.uk

QUANTITY
CURRENCY
COST PER M²
COST PER LINEAR M
TOTAL COST

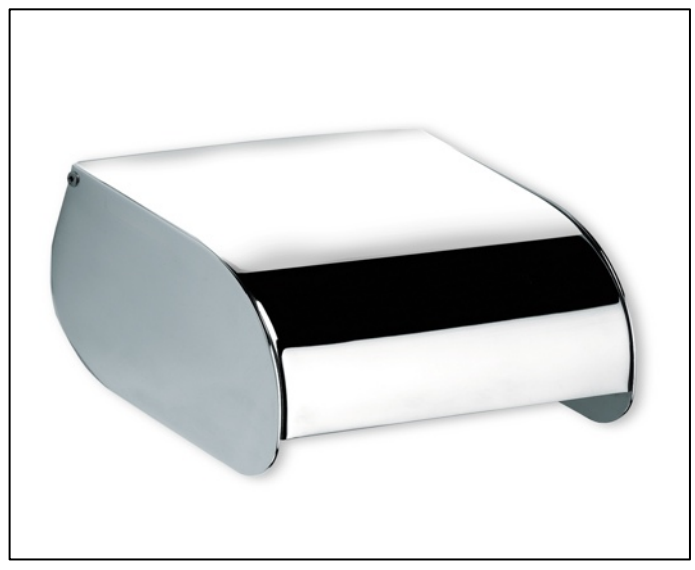

Alternative products/suppliers may not be applicable to this product due to copyright. Any alternatives should be approved by Hilton

Hilton Garden Inn

SPECIFICATION CONTROL SHEET - BATHROOM OPTION B

PROJECT	: HILTON GARDEN INN	CONTROL No	: **BTH-B-15**
PROJECT NO	:	DRAWING REF	:
DATE	: Oct-07	ITEM	: SPARE TOILET ROLL HOLDER
		AREA	: OPTION B

DESCRIPTION : **Wall mounted spare toilet roll holder**

CODE : SC20 Science spare toilet roll holder
FINISH : Chrome plated to BS1224 SC2 1970
Brass tube rail with silver soldered joints
Zinc diecast wall brackets

COMMENTS :

SUPPLIER

NAME : WATERBURY
ADDRESS : 60 Adams Street, Nechells, Birmingham, B7 4LT, UK
TELEPHONE : +44 (0) 121 333 6062
FACSIMILE : +44 (0) 121 333 6459
CONTACT : John Armstrong
EMAIL : jonh.armstrong@waterburys.co.uk

QUANTITY
CURRENCY
COST PER M²
COST PER LINEAR M
TOTAL COST

Alternative products/suppliers may not be applicable to this product due to copyright. Any alternatives should be approved by Hilton

Hilton Garden Inn

SPECIFICATION CONTROL SHEET - BATHROOM OPTION B

PROJECT	: HILTON GARDEN INN	CONTROL No	: **BTH-B-16**
PROJECT NO	:	DRAWING REF	:
DATE	: Oct-07	ITEM	: TOWEL PIGEON HOLES
		AREA	: OPTION B

DESCRIPTION : **Facia panel mounted towel pigeon holes**

FINISH : American Walnut to match casegoods and doors

COMMENTS :

SUPPLIER

NAME : MAIN CONTRACTORS ITEM
ADDRESS :
TELEPHONE :
FACSIMILE :
CONTACT :
EMAIL :

QUANTITY
CURRENCY
COST PER M²
COST PER LINEAR M
TOTAL COST

Alternative products/suppliers may not be applicable to this product due to copyright. Any alternatives should be approved by Hilton

Hilton Garden Inn

SPECIFICATION CONTROL SHEET - BATHROOM OPTION B

PROJECT	: HILTON GARDEN INN	CONTROL No	: **BTH-B-17**
PROJECT NO	:	DRAWING REF	:
DATE	: Oct-07	ITEM	: DRYING RACK
		AREA	: OPTION B

DESCRIPTION : **Wall mounted drying rack**

CODE : SC12 Science Clean Towel Rack
SIZE : 610mm wide
FINISH : Brass tube rail with silver soldered joints
Zinc diecast wall brackets
Chrome plated to BS1224 SC2 1970

COMMENTS :

SUPPLIER

NAME : WATERBURY
ADDRESS : 60 Adams Street, Nechells, Birmingham, B7 4LT, UK
TELEPHONE : +44 (0) 121 333 6062
FACSIMILE : +44 (0) 121 333 6459
CONTACT : John Armstrong
EMAIL : jonh.armstrong@waterburys.co.uk

QUANTITY
CURRENCY
COST PER M²
COST PER LINEAR M
TOTAL COST

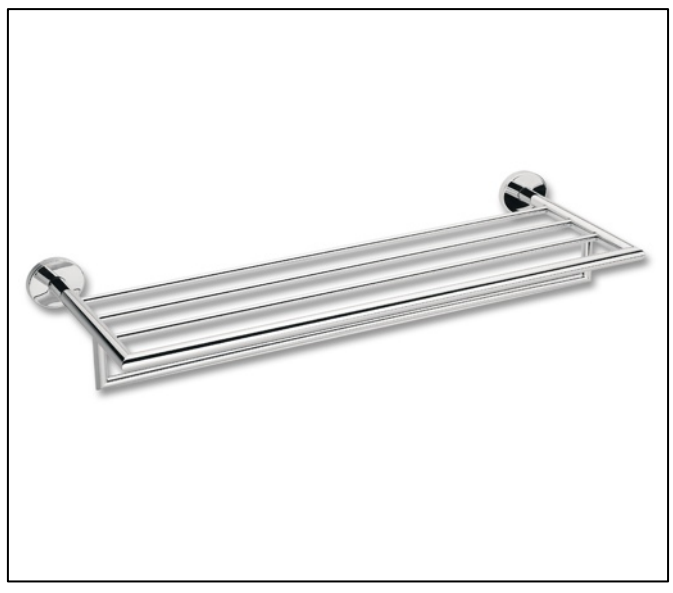

Alternative products/suppliers may not be applicable to this product due to copyright. Any alternatives should be approved by Hilton

Hilton Garden Inn

SPECIFICATION CONTROL SHEET - BATHROOM OPTION B

PROJECT	: HILTON GARDEN INN	CONTROL No	: **BTH-B-18**
PROJECT NO	:	DRAWING REF	:
DATE	: Oct-07	ITEM	: SINGLE ROBE HOOK
		AREA	: OPTION B

DESCRIPTION : **Wall mounted single robe hook**

CODE : SC05 Science single robe hook
FINISH : Solid brass chrome plated to BS1224 SC2 1970

COMMENTS :

SUPPLIER

NAME : WATERBURY
ADDRESS : 60 Adams Street, Nechells, Birmingham, B7 4LT, UK
TELEPHONE : +44 (0) 121 333 6062
FACSIMILE : +44 (0) 121 333 6459
CONTACT : John Armstrong
EMAIL : jonh.armstrong@waterburys.co.uk

QUANTITY
CURRENCY
COST PER M²
COST PER LINEAR M
TOTAL COST

Alternative products/suppliers may not be applicable to this product due to copyright. Any alternatives should be approved by Hilton

Hilton Garden Inn

SPECIFICATION CONTROL SHEET - BATHROOM OPTION B

PROJECT	: HILTON GARDEN INN	CONTROL No	: **BTH-B-19**
PROJECT NO	:	DRAWING REF	:
DATE	: Oct-07	ITEM	: DOOR STOP
		AREA	: OPTION B

DESCRIPTION : **Wall mounted door stop**

CODE : NB 52 Hotel door stop
SIZE : 115mm
FINISH : Diecast wall bracket, brass tube with rubber buffer
Chrome plated to BS1224 SC2 1970

COMMENTS :

SUPPLIER

NAME : WATERBURY
ADDRESS : 60 Adams Street, Nechells, Birmingham, B7 4LT, UK
TELEPHONE : +44 (0) 121 333 6062
FACSIMILE : +44 (0) 121 333 6459
CONTACT : John Armstrong
EMAIL : jonh.armstrong@waterburys.co.uk

QUANTITY
CURRENCY
COST PER M²
COST PER LINEAR M
TOTAL COST

Alternative products/suppliers may not be applicable to this product due to copyright. Any alternatives should be approved by Hilton

Hilton Garden Inn

SPECIFICATION CONTROL SHEET - BATHROOM OPTION B

PROJECT	: HILTON GARDEN INN	CONTROL No	: **BTH-B-20**
PROJECT NO	:	DRAWING REF	:
DATE	: Oct-07	ITEM	: BIN
		AREA	: OPTION B

DESCRIPTION : **Bathroom bin**

CODE : NB 57 Pedal bin
FINISH : Pedal bin polished chrome finish
Polished stainless steel, 5 litre

COMMENTS :

SUPPLIER

NAME : WATERBURY
ADDRESS : 60 Adams Street, Nechells, Birmingham, B7 4LT, UK
TELEPHONE : +44 (0) 121 333 6062
FACSIMILE : +44 (0) 121 333 6459
CONTACT : John Armstrong
EMAIL : jonh.armstrong@waterburys.co.uk

QUANTITY
CURRENCY
COST PER M²
COST PER LINEAR M
TOTAL COST

Alternative products/suppliers may not be applicable to this product due to copyright. Any alternatives should be approved by Hilton

Hilton Garden Inn

SPECIFICATION CONTROL SHEET - BATHROOM OPTION B

PROJECT	: HILTON GARDEN INN	CONTROL No	: **BTH-B-21**
PROJECT NO	:	DRAWING REF	:
DATE	: Oct-07	ITEM	: TOILET BRUSH AND HOLDER
		AREA	: OPTION B

DESCRIPTION : **Toilet brush and holder**

CODE : NB 58 Hotel toilet brush holder

FINISH : Stainless steel bracket for wall mounting
Brass construction
Chrome plated to BS1224 SC2 1970
White nylon bristle brush

COMMENTS :

SUPPLIER

NAME : WATERBURY
ADDRESS : 60 Adams Street, Nechells, Birmingham, B7 4LT, UK
TELEPHONE : +44 (0) 121 333 6062
FACSIMILE : +44 (0) 121 333 6459
CONTACT : John Armstrong
EMAIL : jonh.armstrong@waterburys.co.uk

QUANTITY
CURRENCY
COST PER M²
COST PER LINEAR M
TOTAL COST

Alternative products/suppliers may not be applicable to this product due to copyright. Any alternatives should be approved by Hilton

Hilton Garden Inn

SPECIFICATION CONTROL SHEET - BATHROOM OPTION B

PROJECT	: HILTON GARDEN INN	CONTROL No	: **BTH-B-22**
PROJECT NO	:	DRAWING REF	:
DATE	: Oct-07	ITEM	: GRAB HANDLE
		AREA	: OPTION B

DESCRIPTION : **Grab handle and soap tray**

CODE : SC42

FINISH : Brass tube rail with silver soldered joints
Brass wire form soap dish
Zinc diecast wall brackets
Chrome plated to BS1224 SC2 1970

COMMENTS :

SUPPLIER

NAME : WATERBURY
ADDRESS : 60 Adams Street, Nechells, Birmingham, B7 4LT, UK
TELEPHONE : +44 (0) 121 333 6062
FACSIMILE : +44 (0) 121 333 6459
CONTACT : John Armstrong
EMAIL : jonh.armstrong@waterburys.co.uk

QUANTITY
CURRENCY
COST PER M²
COST PER LINEAR M
TOTAL COST

Alternative products/suppliers may not be applicable to this product due to copyright. Any alternatives should be approved by Hilton

Hilton Garden Inn

SPECIFICATION CONTROL SHEET - BATHROOM OPTION B

PROJECT	: HILTON GARDEN INN	CONTROL No	: **BTH-B-23**
PROJECT NO	:	DRAWING REF	:
DATE	: Oct-07	ITEM	: TISSUE BOX COVER
		AREA	: OPTION B

DESCRIPTION : **Tissue box cover**

CODE : E001526
FINISH : Chrome
SIZE : 135 w x130 h x 135 D

COMMENTS :

SUPPLIER

NAME : Aslotel
ADDRESS : Aslotel House, Pebble Close, Pebble Coombe, Tadworth, Surrey, KT20 7PA
TELEPHONE : +44 (0) 1372 362533
FACSIMILE : +44 (0) 1372 362284
CONTACT : Martin Brown
EMAIL : martin.brown@aslotel.co.uk

QUANTITY
CURRENCY
COST PER M²
COST PER LINEAR M
TOTAL COST

Alternative products/suppliers may not be applicable to this product due to copyright. Any alternatives should be approved by Hilton

Hilton Garden Inn

SPECIFICATION CONTROL SHEET - BATHROOM OPTION B

PROJECT	: HILTON GARDEN INN	CONTROL No	: **BTH-B-24**
PROJECT NO	:	DRAWING REF	:
DATE	: Oct-07	ITEM	: ARTWORK
		AREA	: OPTION B

DESCRIPTION **Artwork**

REFERENCE : Bathroom Option 2, SMU5004
SIZE 375mm x 375mm
FINISH : Artwork printed on 415gsm. Fine Art Canvas using UV resistant pigmented
: inks. Mounted to and wrapped around 35mm deep panels. Surface treated with two coats of eggshell varnish. The panels need to be faced with a moisture resistant material.

COMMENTS :

SUPPLIER

NAME : Indigo Art Limited
ADDRESS : Indigo House, Brunswick Place, Bootle, Liverpool L20 8DT
TELEPHONE : +44 (0) 151 933 9779
FACSIMILE : +44 (0) 151 922 1524
CONTACT : Glen Hughes
EMAIL : info@indigoart.co.uk
WEBSITE

QUANTITIES & COST

QUANTITY
CURRENCY
COST PER M²
COST PER LINEAR M
TOTAL COST

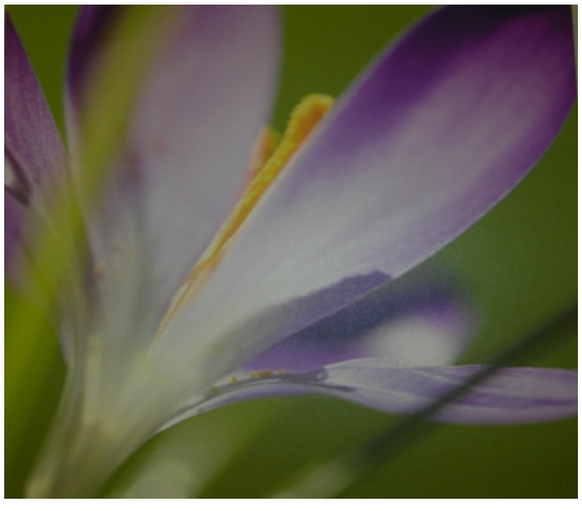

Alternative products/suppliers may not be applicable to this product due to copyright. Any alternatives should be approved by Hilton

Hilton Garden Inn